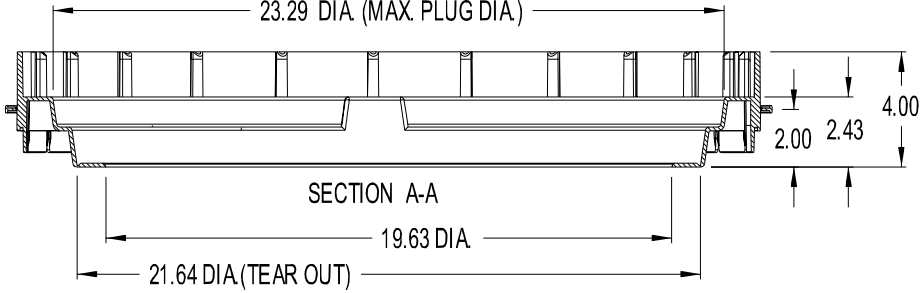

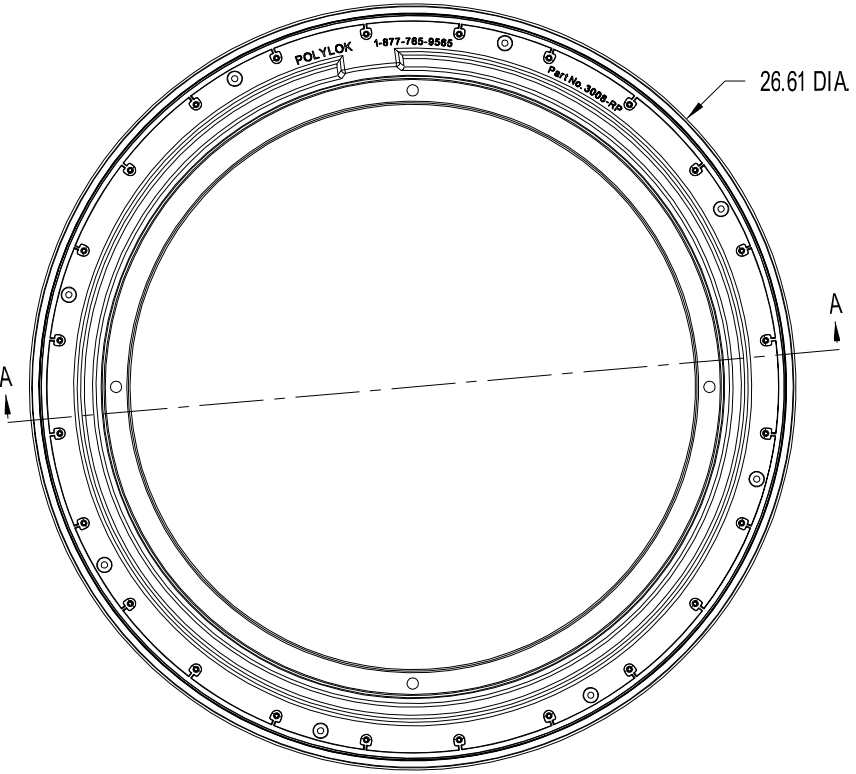

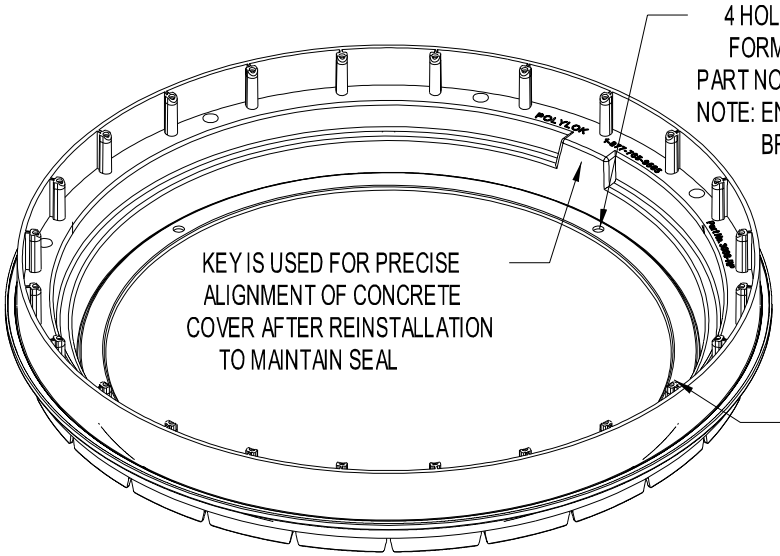

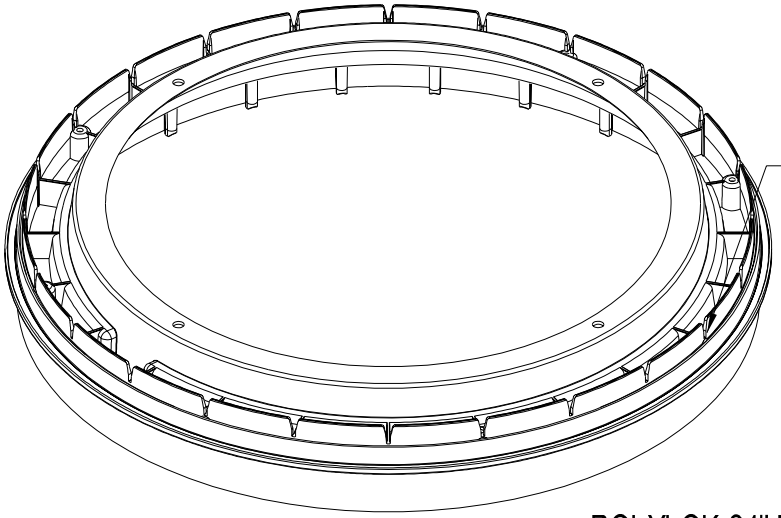

POLYLOK 24" RISER PAN
PART NO.3008-RP
MATERIAL - HDPE
COLOR - GREEN